LiGHT SKY

www.lightsky.com.cn

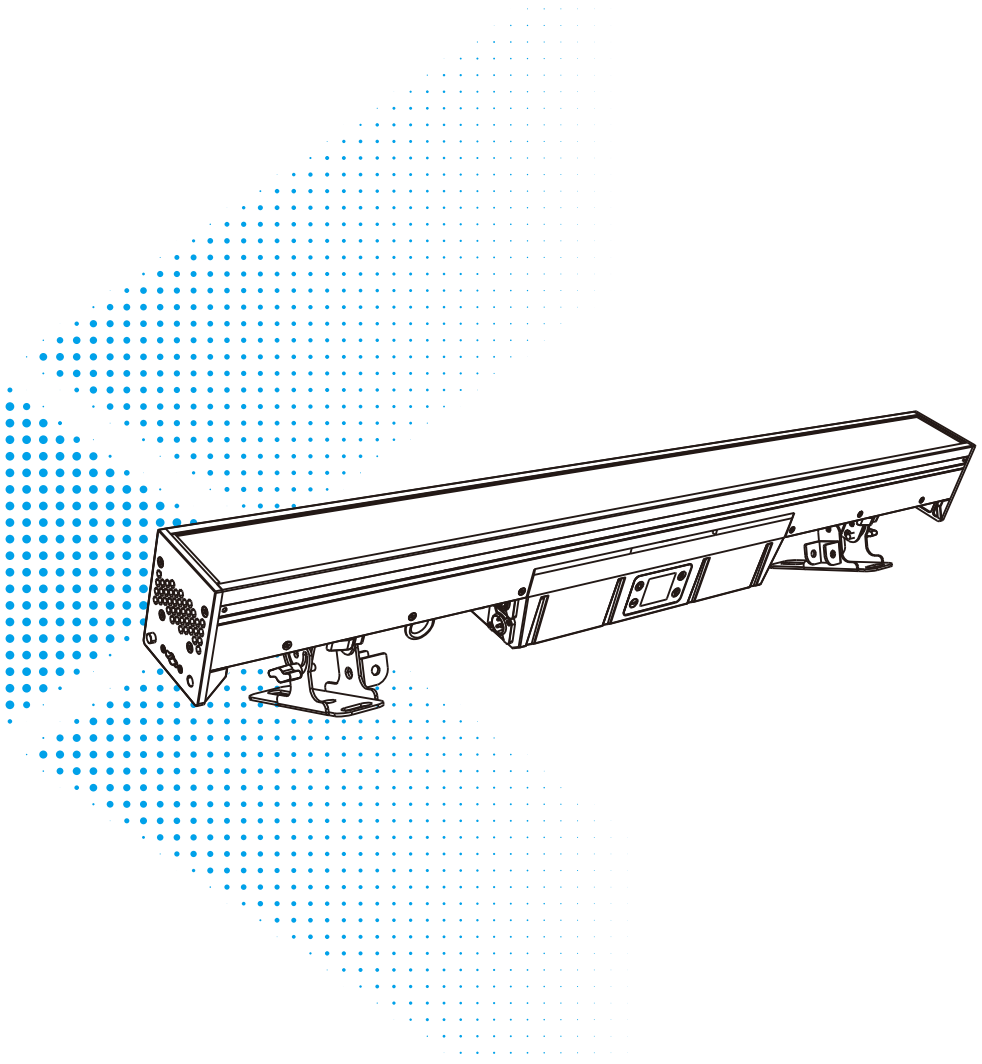

# PIKE

## User Manual

Please read the instruction carefully before use


Fly Dragon Lighting Equipment Co., Ltd.

Add : NO.4 JINGNENG ROAD 1, HUADU DISTRICT, GUANGZHOU, CHINA.
Tel : 020-61828288 Fax : 020-61828188 Postal Code : 510820
Email : flydragon@lightsky.com.cn


Social Media

LiGHT SKY Wechat

# CONTENTS


1、Safety Instructions.....2

2、Technical Specifications.....5

2.1、Attachment And Size.....7

2.2、Lamp Splicing.....8

3、Connection and Control.....9

3.1、Power Supply Connection.....9

3.2、DMX 512 Connection.....10

3.3、Control Panel.....11

4、How To Set The Unit.....12

4.1、Main Function.....12

5、Channel Setting.....15

5.1、Address Setting.....15

5.2、Block Distribution.....16

5.3、DMX 512 Configuration.....17

6、Electrical Connection Diagram.....30

7、 Troubleshooting.....31

8、Fixture Cleaning.....33

9、 Duty Exonerative and Copyright Protectio.....33


**Congratulations on choosing our company product! We thank you for your custom.**

- Please keep in mind that this product, like other products of the company, adheres to the concept of people-oriented design and manufacture, and takes product quality as the foundation.
- We put the interests of customers first, and do our best to meet customer requirements.
- Please read this instruction manual carefully and keep it for future reference. In the case of fully understanding the product information, strictly abide by theUse the instruction manual to ensure that the product is installed, used and serviced correctly and safely.
- Our company is not responsible for any damage to lamps or other performance due to personal failure to follow the instructions during installation, use and maintenance.responsibility.
- Our company reserves the right to modify the manual at any time and without prior notice.

## 1.Safety Instructions

**WARNING**

Please read the instruction carefully which includes important information about the installation, usage and maintenance.

**Please keep this User Manual for future consultation. If you sell the unit to another user, be sure that they also receive this manual.**

The following symbols are used to identify important safety information on the product and in this manual:



**WARNING!** Safety hazard. Risk of severe injury or death.



**WARNING!** Refer to manual betore installing, powering or servicing.



**WARNING!** Hazardous voltage. Risk of severe or lethal electric shock.



**WARNING!** Fire hazard.



**WARNING!** Burn hazard. Hot surface.not touch.Do not touch



**WARNING!** Risk of eye injury.Safety glasses must be worn.



**WARNING!** Risk of hand injury.Safety gloves must be worn.



**WARNING!** Avoid direct eye contact



**DANGER!** Applies only to luiminaires directly mounted on surfaces of non-combustible materials



**DANGER!** Do not discard Trash can



**DANGER!** Mark of ground



**DANGER!** Replace all shatter shields



**DANGER!** Take a short distance from the object to be photographed (meters)



**DANGER!** Rated maximum ambient temperature



**DANGER!** Do not point the lens towards the sun or strong light



**DANGER!** Operation not allowed during runtime

**Important:**

**Damages caused by the disregard of this user manual are not subject to warranty. The dealer will not accept liability for any resulting defects or problems.**

— Unpack and check carefully to ensure that there is no transportation damage before using the unit.

— Do install and operate by qualified operator.

— The light source in this luminaire should be replaced by the manufacturer or its service agent or a similarly qualified person, always cut off the power supply before replacing he light source.

— Do not allow children to operate the fixture.

— Use safety chain when fixing the unit. Handle the unit by carrying its base instead of head only.

— The unit must be installed in a location with adequate ventilation, at least 50cm from adjacent surfaces.

— Be sure that no ventilation slots is blocked, otherwise the unit will be overheated.

— Before operation, ensure that you are connecting this product to the proper voltage in accordance with the specifications in this manual or on the product's specification label.
— It's important to ground the yellow/green conductor to earth in order to avoid electric shock.
— Minimum ambient temperature Ta: -20°C. Maximum ambient temperature Ta: 45°C.
— Do not operate this product at a lower or higher temperature.
— Do not connect the device to any dimmer pack.
— When the lamp is running, do not place combustible objects next to it. The shortest distance between the device and inflammable and explosive objects or materials is 1 m.
— Make sure the power cord is not crimped or damaged; replace it immediately if damaged.
— Unit's surface temperature may reach up to 65°C. Do not touch the housing bare-handedduring its operation.
— Avoid any flammable liquids, water or metal from entering the unit. Once it happens, cut off the mains power immediately.
— Do not operate in a dirty or dusty environment. Do clean the fixture regularly.
— Do not touch any wire during operation as there might be a hazard of electric shock.
— Avoid entanglement of the power cord with other wires.
— The distance between the luminaire and the irradiated surface shall be greater than 3 meters.
— Do not shine light directly into another fixture's lens. Intense beam can damage internal components.
— Direct sunlight or any other strong light beam penetrating the front lens of the luminaire can cause severe internal damage. During unpacking, installation, operation, and xtended idle periods outdoors, it is prohibited to expose the front lens of the luminaire to beams of direct sunlight or any other strong light source from any angle.

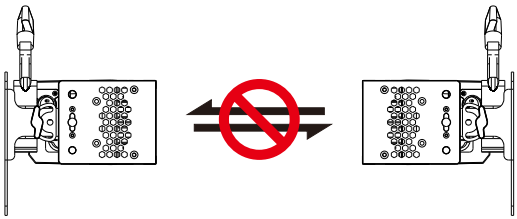

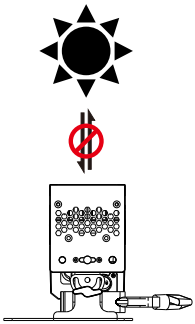

— In the event of serious operating problem, stop using the unit immediately.
— Never turn on and off the unit time after time.
— The housing, the lenses, or the ultraviolet filter must be replaced if they are visibly damaged.

— Do not open the housing as there are no user serviceable parts inside.
— Do not attempt to operate this unit if it becomes damaged. Do not attempt any repairs yourself. Repairs carried out by unskilled people can lead to damage or malfunction. Please contact the nearest authorized technical assistance center if needed.
— Disconnect this product from its power source before servicing.
— Do use the original packaging if the device is to be transported.
— Avoid direct eye exposure to the light source while the product is on.
— Do not operate this product if you see damage on the housing, shields, or cables. Have the damaged parts replaced by an authorized technician at once.

**Installation:**

The luminaire must be securely fastened to the quick-lock hook with screws to prevent vibration or slipping during operation. The supporting structure must be able to withstand 6 times the weight of the luminaire. Additionally, a safety cable must be installed that can endure 30 free-fall drops from 300mm without failure. Installation should only be performed by qualified professionals, and the luminaire must be mounted in an area inaccessible to unauthorized personnel or away from pedestrian traffic.

## 2.Technical Specifications

**OPTICS**

- Light source: Color light: 672 × 0.5W RGB LED+White light: 112 × 3W CW LED
- Beam angle: 71.5 °
- Spot angle: 114 °
- Clearly indicate: Ra≥80
- Average lifespan of light source: 20000h

**EFFECT**

- Mixing System: Uniform RGB Mixing System and Rainbow Effect.
- Control: The light source supports color/white light partition control, with outstanding transformation effects.
- Effect macros: static effect macros and dynamic effect macros functions.
- Dimming: Electronic dimming, providing four dimming curves.
- Strobe: 1-30Hz electronic strobe and random strobe.

**CONTROL AND PROGRAMMING**

- Control channels: 15CH (default), 07CH, 70CH, 117CH, 68CH, 65CH, 33CH, 17CH, 112CH, 39CH, 21CH, see channel table for details.
- Control protocols: Standard DMX512 protocol, RDM protocol, ART-NET protocol.
- Data connection: RJ45 Ethernet port input/output, three core (default) or five core signal input/output.
- Display: LCD screen

**SOFTWARE**

- Upgrade software through DMX signal interface
- Intelligent temperature control ensures LED lifespan

**POWER SUPPLY**

- Input voltage: AC 100-240V 50/60Hz
- Power: 450W
- Power factor: greater than 0.96
- Maximum current of the lamp: 2.1A/220V; 4.5A/100V

**DIMENSION**

- Product size: 1008 × 91 × 225mm (Lamp Hook Version)、
  1008 × 91 × 233mm (Folding light hook Version)
- N.W.: 8.8 kg
- Carton packaging (default): 1110 × 310 × 170mm
- G.W.: 11.9 kg
- Flycase Size(10 units-Optional)： 1060 x 700 x 670mm G.W.: 141.9 kg
- Flycase Size( 8 units-Optional)： 1060 x 580 x 670mm G.W.: 116.4 kg
- Customized version Flycase Size(10 units)： 1200 x 700 x 670mm G.W.: 148.5 kg

**OTHER**

- Protection level: Ip66
- Work environment:- 20℃ ~ 45℃
- Maximum surface temperature of lamp body: 65 ℃
- Hook: Suitable for pipes with a diameter of 40-60 mm.
- Built in splicing lock buckle for quick splicing and alignment.
- Quick lock version: It can achieve quick disassembly of the light hook, easy installation, and flexible adjustment.( Optional)

**APPROVALS**

- The product implementation standard: IEC 60598-1、IEC 60598-2-17
- Approved certifications: CE、RoHs
- The product complies with the following EU directives:
- Low Voltage Directive 2014/35/EU . EMC Directive 2014/30/EU

## illumination diagram

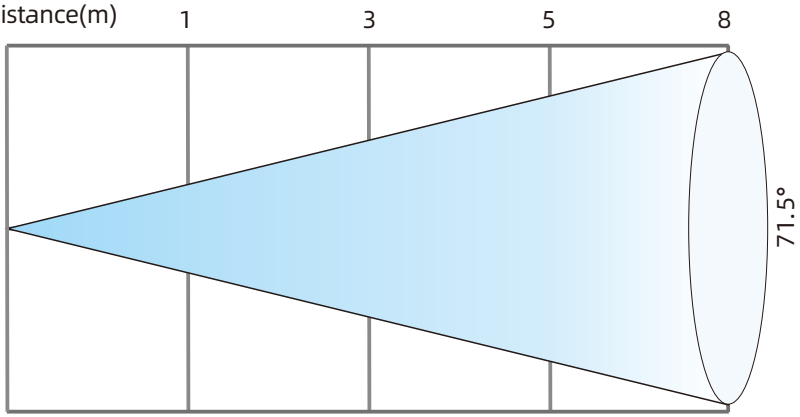


| | | | | |
|---|---|---|---|---|
| 71.5° Lux R | 887 | 99 | 35 | 14 |
| G | 1960 | 218 | 78 | 31 |
| B | 485 | 54 | 19 | 8 |
| W | 6370 | 708 | 255 | 100 |
| RGBW | 5548 | 616 | 222 | 87 |
| Diameter(m) | 1.44 | 4.32 | 7.2 | 11.52 |

## 2.1.Attachment And Size

Attachment contents-Fig.1

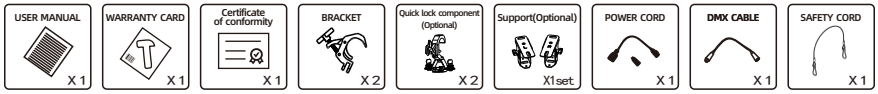


Size-Fig.2(Unit: mm)

### Lamp Hook Version

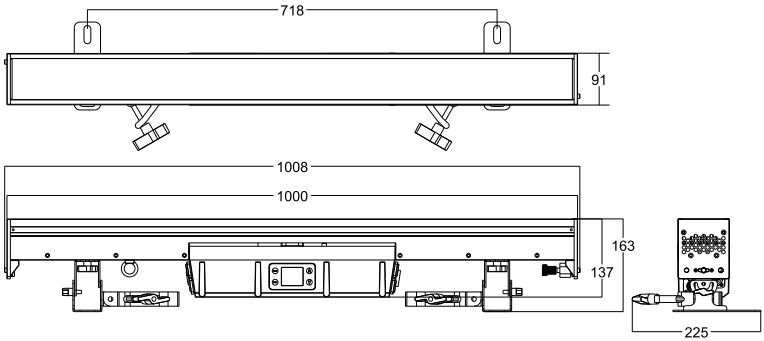


### Quick Lock Version

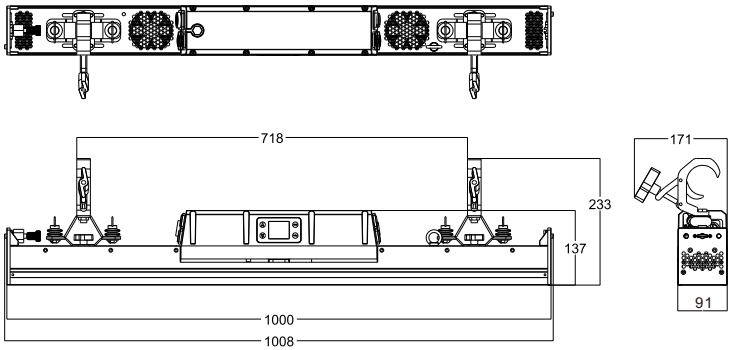

## 2.2. Lamp Splicing

1、The positioning pin of the lamp is aligned with the positioning hole, and the lamp is attached.

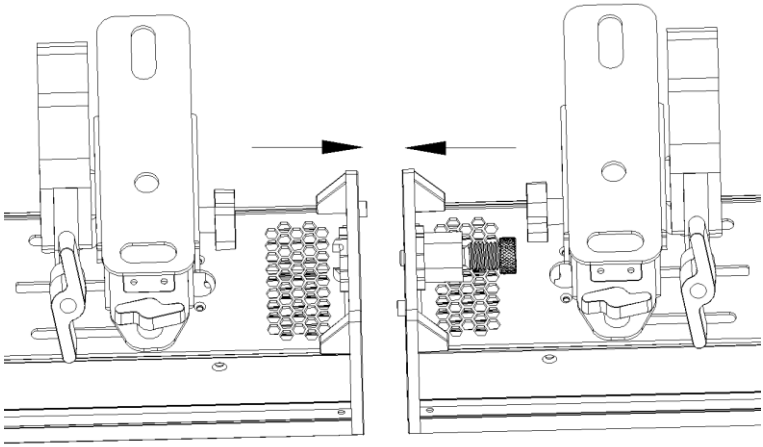

1、Push the lock pin to the square of the arrow and rotate it 90 degrees clockwise; Then turn the hexagon nut clockwise and lock it。

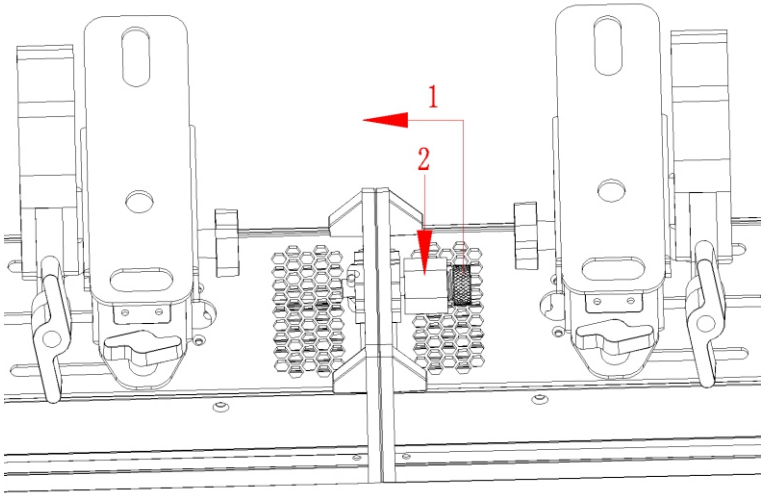

## 3.Connection and Control

### 3.1.Power Supply Connection

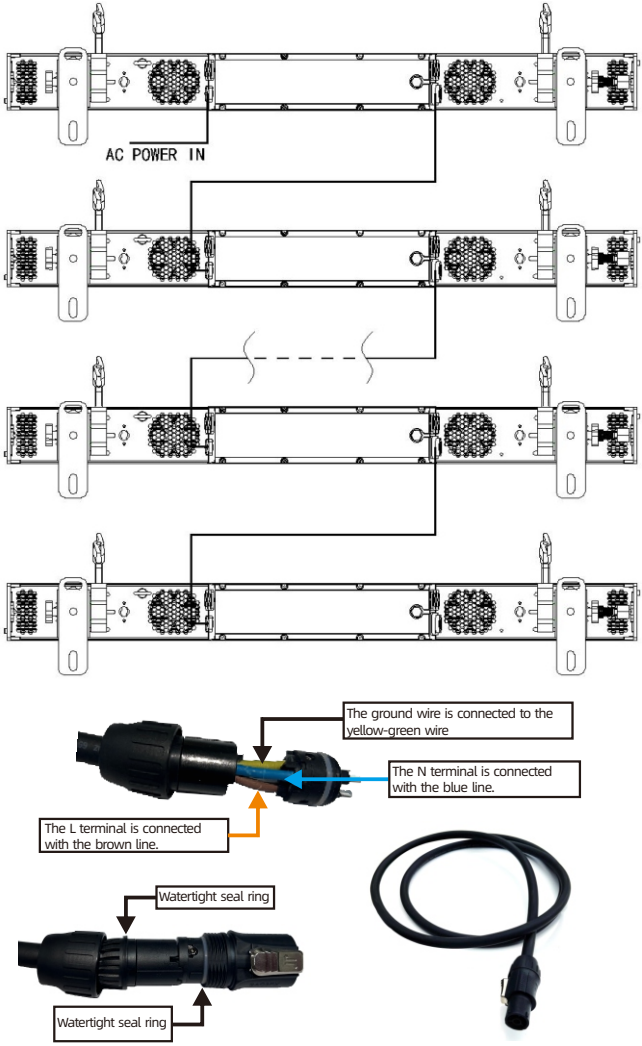


- The bus connecting the power supply must be installed by a qualified professional technician.
- After completing all the above operations and ensuring that it is installed, you can power on the lamp to operate.
- AC100V The power cord can connect up to 4 lamps in series.
- AC220V The power cord can connect up to 8 lamps in series.

## 3.2.DMX 512 Connection

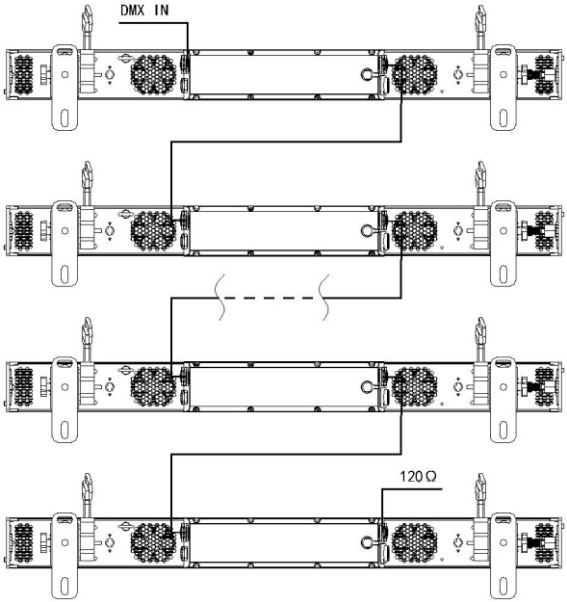


DMX-input

1 - Shield
2 - Signal (-)
3 - Signal (+)
4 - Not connected
5 - Not connected

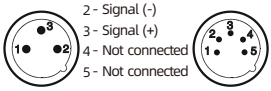

DMX - output

1 - Shield
2 - Signal (-)
3 - Signal (+)
4 - Not connected
5 - Not connected

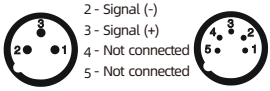

1. At last unit, the DMX cable has to be terminated with a terminator. Solder a 120 Ω 1/4W resistor between pin 2(DMX-) and pin 3(DMX+) into a 3-pin XLR-plug and plug it in the DMX-output of the last unit.
2. Connect the unit together in a "daisy chain" by XLR plug cable from the output of the unit to the input of the next unit. The cable cannot be branched or split to a "Y" cable. DMX 512 is a very high-speed signal. Inadequate or damaged cables, soldered joints or corroded connectors can easily distort the signal and shut down the system.
3. The DMX output and input connectors are pass-through to maintain the DMX circuit, when one of the units' power is disconnected.
4. Each lighting unit needs to have a DMX address to receive the data by the controller. The address number is between 1-512.
5. The end of the DMX 512 system should be terminated to reduce signal errors.
6. 3 pin XLR connectors are more popular than 5 pins XLR.
   3 pin XLR: Pin 1: GND, Pin 2: Negative signal (-), Pin 3: Positive signal (+)
   5 pin XLR: Pin 1: GND, Pin 2: Negative signal (-), Pin 3: Positive signal (+), Pin4, Pin5 not used.

## 3.3.Control Panel




The lamp adopts four capacitive touch buttons. In order to prevent misoperation caused by rain, please press the display prompt when setting the lamp and touch the corresponding button to unlock it.

**Quick operation**

1：Press the UP key in the standby interface to view the UID and software version information of lamps and lanterns.

2：Press the DOWN key in the standby interface to view the lamp error message.

3：Press UP and DOWN keys at the same time in the standby interface to quickly change the display direction of the display screen.

4：When setting DMX address, press ENTER to ENTER. When the address code background is red, press UP/DOWN to add and subtract 1, press ENTER to add and subtract the address code background, press UP/DOWN to add and subtract the address code according to the lighting channel, and then press Enter to turn the address code background into white, and the address code value is saved.

**Synchronous setting**

The lamps and lanterns connected with the same DMX signal line/network cable can be synchronized with other lamps and lanterns when setting some functions.

1：One light is set as the host.（Settings--Master/Remote--Master）

2：Set the settings that the host needs to change, and press ENTER to save.

3：Select this setting, press ENTER for a long time, and a synchronization prompt will pop up. Select Yes, and then press ENTER for synchronization.

4：After setting the synchronous light, set this light as a slave.（Settings--Master/Remote--Slave）

# 4.How To Set The Unit

## 4.1.Main Function

| | | | |
|---|---|---|---|
| DMX Addr:001 | | | |
| Signal Src | DMX512 | | |
| | ArtNet | | |
| Art-Net IP Settings | DHCP | N | Synchronizable setting |
| | | Y | |
| | IP | 002.000.000.000 | |
| | Mask | 255.000.000.000 | |
| | GW | 255.000.000.000 | |
| | Net | 000 (0-127) | |
| | Sub Net | 00 (0-15) | |
| | Universe | 00 (0-15) | |
| Channel Mode | 15CH | | Synchronizable setting |
| | 70CH | | |
| | 117CH | | |
| | 68CH | | |
| | 65CH | | |
| | 33CH | | |
| | 17CH | | |
| | 112CH | | |
| | 39CH | | |
| | 21CH | | |
| | 7CH | | |
| RunMode | DMX | | This setting is restarted without saving. |
| | Auto | | |
| Settings | Master/Remote | Slave | This setting is restarted without saving. |
| | | Master | |
| | DimCurve | Linear | Synchronizable setting |
| | | SquareRoot | |
| | | S-Curve | |
| | | Square | |
| | DimSpeed | Fast | |

| | | | | |
|---|---|---|---|---|
| | | Slow | | |
| | Pixelv Inversion | **No** | | |
| | | Yes | | |
| | Lost Signal | **Keep** | | |
| | | Shutter Off | | |
| | BooT No DMX | **Nothing** | | |
| | | Mannual | | |
| DMX Manual | Auto Exit | **Never** | | Synchronizable setting |
| | | 300Sec | | |
| | | 180Sec | | |
| | | 120Sec | | |
| | | 90Sec | | |
| | | 60Sec | | |
| | | 40Sec | | |
| | | 30Sec | | |
| | | 20Sec | | |
| | | 10Sec | | |
| | Keep | **No** | | Synchronizable setting |
| | | Yes | | |
| | Red | 000-255 | | |
| | Green | 000-255 | | |
| | Blue | 000-255 | | |
| | White | 000-255 | | |
| | Dim | 000-255 | | |
| | StrobeKeepTime | 000-255 | | |
| | StrobeSpeed | 000-255 | | |
| | Frost | 000-255 | | |
| Adv. Settings | Display Settings | Sleep | Never | Synchronizable setting |
| | | | 300Sec | |
| | | | 180Sec | |

| | | | | |
|---|---|---|---|---|
| | | | 120Sec | |
| | | | 90Sec | |
| | | | 60Sec | |
| | | | 40Sec | |
| | | | 30Sec | |
| | | | 20Sec | |
| | | | 10Sec | |
| | | Invert | N | Synchronizable setting |
| | | | Y | |
| | | Display Lock | Off | Synchronizable setting |
| | | | On | |
| | Language | Chinese | | Synchronizable setting |
| | | Eng | | |
| | Restore Settings | No/Yes | | |
| Factory Settings | | | | |
| Info | DMX Monitor | DmxValue001-032 | | |
| | | DmxValue033-064 | | |
| | | DmxValue065-096 | | |
| | | DmxValue097-117 | | |
| | | FPS | | |
| | | Total Chns | | |
| | LED UsageTime | Current | | |
| | | Total | | |
| | | Clear | | |
| | Test | | | |
| | Error. | | | |
| | Product Code | | | |

## 5.Channel Setting

Enter the MENU menu, select DMX settings, choose channel mode, press the ENTER button to confirm, you can use the up and down keys to select: 15 channels (default), 7 channels, 70 channels, 117 channels, 68 channels, 65 channels, 33 channels, 17 channels, 112 channels, 39 channels, 21 channels, press ENTER to confirm the selection, press MENU to return to the previous menu.

## 5.1.Address Setting

Enter the MENU, select the DMX settings function, choose the DMX address, press the ENTER button to confirm, and the current DMX address will be displayed on the screen. Use the up/down buttons to select addresses 001~512, and press the ENTER button to save. Press the ENTER button to return to the previous menu.

Please refer to the following diagram to address your DMX512 channel for the first 4 units.

| Channel mode | Unit 1 Address | Unit 2 Address | Unit 3 Address | Unit 4 Address |
|---|---|---|---|---|
| 15 Channel | 1 | 16 | 31 | 46 |
| 07 Channel | 1 | 08 | 15 | 22 |
| 70 Channel | 1 | 71 | 141 | 211 |
| 117 Channel | 1 | 118 | 235 | 352 |
| 68 Channel | 1 | 69 | 137 | 205 |
| 65 Channel | 1 | 66 | 131 | 196 |
| 33 Channel | 1 | 34 | 67 | 100 |
| 17 Channel | 1 | 18 | 35 | 52 |
| 112 Channel | 1 | 113 | 225 | 337 |
| 39 Channel | 1 | 40 | 79 | 118 |
| 21 Channel | 1 | 22 | 43 | 64 |

## 5.2.Block Distribution

17 Channel RGB

| 1 | 2 | 3 | 4 |
|---|---|---|---|

17 Channel W

| | | | |
|---|---|---|---|
| 1 | 2 | 3 | 4 |

33 Channel RGB

| 1 | 2 | 3 | 4 | 5 | 6 | 7 | 8 |
|---|---|---|---|---|---|---|---|

33 Channel W

| | | | | | | | |
|---|---|---|---|---|---|---|---|
| 1 | 2 | 3 | 4 | 5 | 6 | 7 | 8 |

39 Channel RGB

| 1 | 2 | 3 | 4 |
|---|---|---|---|
| 5 | 6 | 7 | 8 |

39 Channel W

| | | | |
|---|---|---|---|
| 1 | 2 | 3 | 4 |

65/68/70 Channel RGB

| 1 | 2 | 3 | 4 | 5 | 6 | 7 | 8 | 9 | 10 | 11 | 12 | 13 | 14 | 15 | 16 |
|---|---|---|---|---|---|---|---|---|---|---|---|---|---|---|---|

65/68/70 Channel W

| | | | | | | | | | | | | | | | |
|---|---|---|---|---|---|---|---|---|---|---|---|---|---|---|---|
| 1 | 2 | 3 | 4 | 5 | 6 | 7 | 8 | 9 | 10 | 11 | 12 | 13 | 14 | 15 | 16 |

112/117 Channel RGB

| 1 | 2 | 3 | 4 | 5 | 6 | 7 | 8 | 9 | 10 | 11 | 12 | 13 | 14 | 15 | 16 |
|---|---|---|---|---|---|---|---|---|---|---|---|---|---|---|---|
| 17 | 18 | 19 | 20 | 21 | 22 | 23 | 24 | 25 | 26 | 27 | 28 | 29 | 30 | 31 | 32 |

112/117 Channel W

| | | | | | | | | | | | | | | | |
|---|---|---|---|---|---|---|---|---|---|---|---|---|---|---|---|
| 1 | 2 | 3 | 4 | 5 | 6 | 7 | 8 | 9 | 10 | 11 | 12 | 13 | 14 | 15 | 16 |

## 5.3.DMX 512 Configuration

Please control the fixture by referring to the configurations below

| 7 CHANNELS | | |
|---|---|---|
| CHANNEL | DMX VALUE | FUNCTION |
| 1 | 000-255 | Red |
| 2 | 000-255 | Green |
| 3 | 000-255 | Blue |
| 4 | 000-255 | White |
| 5 | | Dimmer |
| | 000-005 | No Function |
| | 006-255 | Dimmer 0--100% |
| 6 | 000-255 | Dimmer Fine |
| 7 | 000-255 | Frost |

| 15 CHANNELS | | |
|---|---|---|
| CHANNEL | DMX VALUE | FUNCTION |
| 1 | 000-255 | Red |
| 2 | 000-255 | Green |
| 3 | 000-255 | Blue |
| 4 | 000-255 | White |
| 5 | | Color Macro |
| | 000-009 | No Function |
| | 010-017 | Color1 |
| | 018-024 | Color2 |
| | 025-032 | Color3 |
| | 033-039 | Color4 |
| | 040-047 | Color5 |
| | 048-054 | Color6 |
| | 055-061 | Color7 |
| | 062-069 | Color8 |
| | 070-076 | Color9 |
| | 077-084 | Color10 |
| | 085-091 | Color11 |
| | 092-099 | Color12 |
| | 100-106 | Color13 |
| | 107-113 | Color14 |
| | 114-121 | Color15 |
| | 122-128 | Color16 |
| | 129-136 | Color17 |
| | 137-143 | Color18 |
| | 144-151 | Color19 |

| | | |
|---|---|---|
| | 152-158 | Color20 |
| | 159-165 | Color21 |
| | 166-173 | Color22 |
| | 174-180 | Color23 |
| | 181-188 | Color24 |
| | 189-195 | Color25 |
| | 196-203 | Color26 |
| | 204-210 | Color27 |
| | 211-217 | Color28 |
| | 218-225 | Color29 |
| | 226-232 | Color30 |
| | 233-240 | Color31 |
| | 241-247 | Color32 |
| | 248-255 | Color33 |
| 6 | | Dimmer |
| | 000-005 | No Function |
| | 006-255 | Dimmer 0--100% |
| 7 | 000-255 | Dimmer Fine |
| 8 | 000-255 | Strobe Duration |
| 9 | | Strobe Rate |
| | 000-006 | No Function |
| | 007-255 | Slow--Fast |
| 10 | | Strobe |
| | 000-005 | No Function |
| | 006-050 | Ramp up |
| | 051-100 | Ramp down |
| | 101-150 | Ramp up-down |
| | 151-200 | Lightning |
| | 201-255 | Random |
| 11 | | Macro RGB |
| | 000-023 | No Macro |
| | 024-031 | Macro1 |
| | 032-039 | Macro2 |
| | 040-047 | Macro3 |
| | 048-055 | Macro4 |
| | 056-063 | Macro5 |
| | 064-071 | Macro6 |
| | 072-079 | Macro7 |
| | 080-087 | Macro8 |
| | 088-095 | Macro9 |
| | 096-103 | Macro10 |
| | 104-111 | Macro11 |
| | 112-119 | Macro12 |

| | | |
|---|---|---|
| | 120-127 | Macro13 |
| | 128-135 | Macro14 |
| | 136-143 | Macro15 |
| | 144-151 | Macro16 |
| | 152-159 | Macro17 |
| | 160-167 | Macro18 |
| | 168-175 | Macro19 |
| | 176-183 | Macro20 |
| | 184-191 | Macro21 |
| | 192-199 | Macro22 |
| | 200-207 | Macro23 |
| | 208-215 | Macro24 |
| | 216-223 | Macro25 |
| | 224-231 | Macro26 |
| | 232-239 | Macro27 |
| | 240-247 | Macro28 |
| | 248-255 | Macro29 |
| 12 | | Macro White |
| | 000-090 | No Macro |
| | 091-105 | Macro1 |
| | 106-120 | Macro2 |
| | 121-135 | Macro3 |
| | 136-150 | Macro4 |
| | 151-165 | Macro5 |
| | 166-180 | Macro6 |
| | 181-195 | Macro7 |
| | 196-210 | Macro8 |
| | 211-225 | Macro9 |
| | 226-240 | Macro10 |
| | 241-255 | Macro11 |
| 13 | | Macro Speed |
| | 000-127 | Normal , Slow--Fast |
| | 128-255 | Inversion , Slow--Fast |
| 14 | 000-255 | Fade |
| 15 | 000-255 | Frost |

| 21 CHANNELS | | |
|---|---|---|
| CHANNEL | DMX VALUE | FUNCTION |
| 1 | 000-255 | Red |
| 2 | 000-255 | Green |
| 3 | 000-255 | Blue |
| 4 | | Color Macro |
| | 000-009 | No Function |
| | 010-017 | Color1 |
| | 018-024 | Color2 |
| | 025-032 | Color3 |
| | 033-039 | Color4 |
| | 040-047 | Color5 |
| | 048-054 | Color6 |
| | 055-061 | Color7 |
| | 062-069 | Color8 |
| | 070-076 | Color9 |
| | 077-084 | Color10 |
| | 085-091 | Color11 |
| | 092-099 | Color12 |
| | 100-106 | Color13 |
| | 107-113 | Color14 |
| | 114-121 | Color15 |
| | 122-128 | Color16 |
| | 129-136 | Color17 |
| | 137-143 | Color18 |
| | 144-151 | Color19 |
| | 152-158 | Color20 |
| | 159-165 | Color21 |
| | 166-173 | Color22 |
| | 174-180 | Color23 |
| | 181-188 | Color24 |
| | 189-195 | Color25 |
| | 196-203 | Color26 |
| | 204-210 | Color27 |
| | 211-217 | Color28 |
| | 218-225 | Color29 |
| | 226-232 | Color30 |
| | 233-240 | Color31 |
| | 241-247 | Color32 |
| | 248-255 | Color33 |
| 5 | | Dimmer RGB |
| | 000-005 | No Function |

| | | |
|---|---|---|
| | 006-255 | Dimmer 0--100% |
| 6 | 000-255 | Dimmer Fine RGB |
| 7 | 000-255 | Strobe Duration RGB |
| 8 | | Strobe Rate RGB |
| | 000-006 | No Function |
| | 007-255 | Slow--Fast |
| 9 | | StrobeRGB |
| | 000-005 | No Function |
| | 006-050 | Ramp up |
| | 051-100 | Ramp down |
| | 101-150 | Ramp up-down |
| | 151-200 | Lightning |
| | 201-255 | Random |
| 10 | | Macro RGB |
| | 000-023 | No Macro |
| | 024-031 | Macro1 |
| | 032-039 | Macro2 |
| | 040-047 | Macro3 |
| | 048-055 | Macro4 |
| | 056-063 | Macro5 |
| | 064-071 | Macro6 |
| | 072-079 | Macro7 |
| | 080-087 | Macro8 |
| | 088-095 | Macro9 |
| | 096-103 | Macro10 |
| | 104-111 | Macro11 |
| | 112-119 | Macro12 |
| | 120-127 | Macro13 |
| | 128-135 | Macro14 |
| | 136-143 | Macro15 |
| | 144-151 | Macro16 |
| | 152-159 | Macro17 |
| | 160-167 | Macro18 |
| | 168-175 | Macro19 |
| | 176-183 | Macro20 |
| | 184-191 | Macro21 |
| | 192-199 | Macro22 |
| | 200-207 | Macro23 |
| | 208-215 | Macro24 |
| | 216-223 | Macro25 |
| | 224-231 | Macro26 |
| | 232-239 | Macro27 |
| | 240-247 | Macro28 |

| | | |
|---|---|---|
| | 248-255 | Macro29 |
| 11 | | Macro Speed RGB |
| | 000-127 | Normal , Slow--Fast |
| | 128-255 | Inversion , Slow--Fast |
| 12 | 000-255 | Fade RGB |
| 13 | | Dimmer White |
| | 000-005 | No Function |
| | 006-255 | Dimmer 0--100% |
| 14 | 000-255 | Dimmer Fine White |
| 15 | 000-255 | Strobe Duration White |
| 16 | | Strobe Rate White |
| | 000-006 | No Function |
| | 007-255 | Slow--Fast |
| 17 | | StrobeW |
| | 000-005 | No Function |
| | 006-050 | Ramp up |
| | 051-100 | Ramp down |
| | 101-150 | Ramp up-down |
| | 151-200 | Lightning |
| | 201-255 | Random |
| 18 | | Macro White |
| | 000-090 | No Macro |
| | 091-105 | Macro1 |
| | 106-120 | Macro2 |
| | 121-135 | Macro3 |
| | 136-150 | Macro4 |
| | 151-165 | Macro5 |
| | 166-180 | Macro6 |
| | 181-195 | Macro7 |
| | 196-210 | Macro8 |
| | 211-225 | Macro9 |
| | 226-240 | Macro10 |
| | 241-255 | Macro11 |
| 19 | | Macro Speed White |
| | 000-127 | Normal , Slow--Fast |
| | 128-255 | Inversion , Slow--Fast |
| 20 | 000-255 | Fade White |
| 21 | 000-255 | Frost |

| 17 CHANNELS | | |
|---|---|---|
| CHANNEL | DMX VALUE | FUNCTION |
| 1 | 000-255 | Red1 |
| 2 | 000-255 | Green1 |
| 3 | 000-255 | Blue1 |
| 4 | 000-255 | Red2 |
| 5 | 000-255 | Green2 |
| 6 | 000-255 | Blue2 |
| 7 | 000-255 | Red3 |
| 8 | 000-255 | Green3 |
| 9 | 000-255 | Blue3 |
| 10 | 000-255 | Red4 |
| 11 | 000-255 | Green4 |
| 12 | 000-255 | Blue4 |
| 13 | 000-255 | White1 |
| 14 | 000-255 | White2 |
| 15 | 000-255 | White3 |
| 16 | 000-255 | White4 |
| 17 | 000-255 | Frost |

| 33 CHANNELS | | |
|---|---|---|
| CHANNEL | DMX VALUE | FUNCTION |
| 1 | 000-255 | Red1 |
| 2 | 000-255 | Green1 |
| 3 | 000-255 | Blue1 |
| 4 | 000-255 | Red2 |
| 5 | 000-255 | Green2 |
| 6 | 000-255 | Blue2 |
| ..... | 000-255 | ..... |
| 19 | 000-255 | Red7 |
| 20 | 000-255 | Green7 |
| 21 | 000-255 | Blue7 |
| 22 | 000-255 | Red8 |
| 23 | 000-255 | Green8 |
| 24 | 000-255 | Blue8 |
| 25 | 000-255 | White1 |
| 26 | 000-255 | White2 |
| ..... | 000-255 | ..... |
| 31 | 000-255 | White7 |
| 32 | 000-255 | White8 |
| 33 | 000-255 | Frost |

| 39 CHANNELS | | |
|---|---|---|
| CHANNEL | DMX VALUE | FUNCTION |
| 1 | 000-255 | Red1 |
| 2 | 000-255 | Green1 |
| 3 | 000-255 | Blue1 |
| 4 | 000-255 | Red2 |
| 5 | 000-255 | Green2 |
| 6 | 000-255 | Blue2 |
| 7 | 000-255 | Red3 |
| ..... | 000-255 | ..... |
| 19 | 000-255 | Red7 |
| 20 | 000-255 | Green7 |
| 21 | 000-255 | Blue7 |
| 22 | 000-255 | Red8 |
| 23 | 000-255 | Green8 |
| 24 | 000-255 | Blue8 |
| 25 | | Dimmer RGB |
| | 000-005 | No Function |
| | 006-255 | Dimmer 0--100% |
| 26 | 000-255 | Dimmer Fine RGB |
| 27 | 000-255 | Strobe Duration RGB |
| 28 | | Strobe Rate RGB |
| | 000-006 | No Function |
| | 007-255 | Slow--Fast |
| 29 | | StrobeRGB |
| | 000-005 | No Function |
| | 006-050 | Ramp up |
| | 051-100 | Ramp down |
| | 101-150 | Ramp up-down |
| | 151-200 | Lightning |
| | 201-255 | Random |
| 30 | 000-255 | White1 |
| 31 | 000-255 | White2 |
| 32 | 000-255 | White3 |
| 33 | 000-255 | White4 |
| 34 | | Dimmer White |
| | 000-005 | No Function |
| | 006-255 | Dimmer 0--100% |
| 35 | 000-255 | Dimmer Fine White |
| 36 | 000-255 | Strobe Duration White |
| 37 | | Strobe Rate White |

| | | |
|---|---|---|
| | 000-006 | No Function |
| | 007-255 | Slow--Fast |
| 38 | | StrobeW |
| | 000-005 | No Function |
| | 006-050 | Ramp up |
| | 051-100 | Ramp down |
| | 101-150 | Ramp up-down |
| | 151-200 | Lightning |
| | 201-255 | Random |
| 39 | 000-255 | Frost |

| 65 CHANNELS | | |
|---|---|---|
| CHANNEL | DMX VALUE | FUNCTION |
| 1 | 000-255 | Red1 |
| 2 | 000-255 | Green1 |
| 3 | 000-255 | Blue1 |
| 4 | 000-255 | Red2 |
| 5 | 000-255 | Green2 |
| 6 | 000-255 | Blue2 |
| ..... | 000-255 | ..... |
| 43 | 000-255 | Red15 |
| 44 | 000-255 | Green15 |
| 45 | 000-255 | Blue15 |
| 46 | 000-255 | Red16 |
| 47 | 000-255 | Green16 |
| 48 | 000-255 | Blue16 |
| 49 | 000-255 | White1 |
| 50 | 000-255 | White2 |
| ..... | 000-255 | ..... |
| 63 | 000-255 | White15 |
| 64 | 000-255 | White16 |
| 65 | 000-255 | Frost |

| 68 CHANNELS | | |
|---|---|---|
| CHANNEL | DMX VALUE | FUNCTION |
| 1 | | Dimmer |
| | 000-005 | No Function |
| | 006-255 | Dimmer 0--100% |
| 2 | | Strobe RGB |
| | 000-007 | No Function |
| | 008-127 | Strobe Slow--Fast |
| | 128-130 | No Function |
| | 131-250 | Random |
| | 251-255 | No Function |
| 3 | | Strobe White |
| | 000-007 | No Function |
| | 008-127 | Strobe Slow--Fast |
| | 128-130 | No Function |
| | 131-250 | Random |
| | 251-255 | No Function |
| 4 | 000-255 | Frost |
| 5 | 000-255 | Red1 |
| 6 | 000-255 | Green1 |
| 7 | 000-255 | Blue1 |
| 8 | 000-255 | Red2 |
| 9 | 000-255 | Green2 |
| 10 | 000-255 | Blue2 |
| ..... | 000-255 | ..... |
| 47 | 000-255 | Red15 |
| 48 | 000-255 | Green15 |
| 49 | 000-255 | Blue15 |
| 50 | 000-255 | Red16 |
| 51 | 000-255 | Green16 |
| 52 | 000-255 | Blue16 |
| 53 | 000-255 | White1 |
| 54 | 000-255 | White2 |
| ..... | 000-255 | ..... |
| 67 | 000-255 | White15 |
| 68 | 000-255 | White16 |

| 70 CHANNELS | | |
|---|---|---|
| CHANNEL | DMX VALUE | FUNCTION |
| 1 | | Dimmer |
| | 000-005 | No Function |
| | 006-255 | Dimmer 0--100% |
| 2 | | Strobe RGB |
| | 000-007 | No Function |
| | 008-127 | Strobe Slow--Fast |
| | 128-130 | No Function |
| | 131-250 | Random |
| | 251-255 | No Function |
| 3 | | Strobe White |
| | 000-007 | No Function |
| | 008-127 | Strobe Slow--Fast |
| | 128-130 | No Function |
| | 131-250 | Random |
| | 251-255 | No Function |
| 4 | 000-255 | Frost |
| 5 | 000-255 | Red1 |
| 6 | 000-255 | Green1 |
| 7 | 000-255 | Blue1 |
| 8 | 000-255 | Red2 |
| 9 | 000-255 | Green2 |
| 10 | 000-255 | Blue2 |
| ..... | 000-255 | ..... |
| 47 | 000-255 | Red15 |
| 48 | 000-255 | Green15 |
| 49 | 000-255 | Blue15 |
| 50 | 000-255 | Red16 |
| 51 | 000-255 | Green16 |
| 52 | 000-255 | Blue16 |
| 53 | 000-255 | White1 |
| 54 | 000-255 | White2 |
| | 000-255 | |
| 67 | 000-255 | White15 |
| 68 | 000-255 | White16 |
| 69 | 000-255 | Fade RGB |
| 70 | 000-255 | Fade White |

| 112 CHANNELS | | |
|---|---|---|
| CHANNEL | DMX VALUE | FUNCTION |
| 1 | 000-255 | Red1 |
| 2 | 000-255 | Green1 |
| 3 | 000-255 | Blue1 |
| 4 | 000-255 | Red2 |
| 5 | 000-255 | Green2 |
| 6 | 000-255 | Blue2 |
| ..... | 000-255 | ..... |
| 91 | 000-255 | Red31 |
| 92 | 000-255 | Green31 |
| 93 | 000-255 | Blue31 |
| 94 | 000-255 | Red32 |
| 95 | 000-255 | Green32 |
| 96 | 000-255 | Blue32 |
| 97 | 000-255 | White1 |
| 98 | 000-255 | White2 |
| ..... | 000-255 | ..... |
| 111 | 000-255 | White15 |
| 112 | 000-255 | White16 |

| 117 CHANNELS | | |
|---|---|---|
| CHANNEL | DMX VALUE | FUNCTION |
| 1 | | Dimmer |
| | 000-005 | No Function |
| | 006-255 | Dimmer 0--100% |
| 2 | 000-255 | Strobe Duration |
| 3 | | Strobe Rate |
| | 000-006 | No Function |
| | 007-255 | Slow--Fast |
| 4 | | Strobe |
| | 000-005 | No Function |
| | 006-050 | Ramp up |
| | 051-100 | Ramp down |
| | 101-150 | Ramp up-down |
| | 151-200 | Lightning |
| | 201-255 | Random |
| 5 | 000-255 | Frost |
| 6 | 000-255 | Red1 |
| 7 | 000-255 | Green1 |
| 8 | 000-255 | Blue1 |
| 9 | 000-255 | Red2 |
| 10 | 000-255 | Green2 |
| 11 | 000-255 | Blue2 |
| ..... | 000-255 | ..... |
| 96 | 000-255 | Red31 |
| 97 | 000-255 | Green31 |
| 98 | 000-255 | Blue31 |
| 99 | 000-255 | Red32 |
| 100 | 000-255 | Green32 |
| 101 | 000-255 | Blue32 |
| 102 | 000-255 | White1 |
| 103 | 000-255 | White2 |
| ..... | 000-255 | ..... |
| 116 | 000-255 | White15 |
| 117 | 000-255 | White16 |

## 6.Electrical Connection Diagram

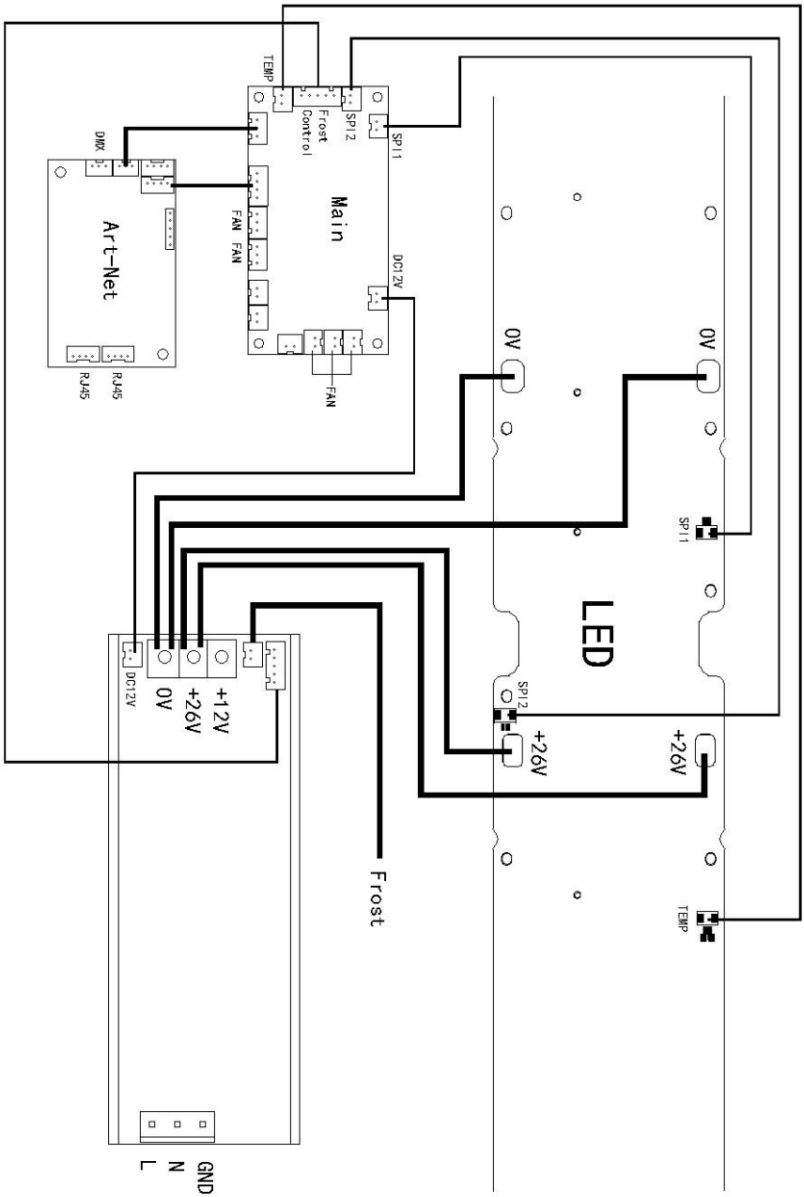

## 7.Troubleshooting

**The following are common faults of lamps and corresponding solutions. Faults that cannot be repaired by yourself should be handled by professionally qualified personnel. Disconnect the power supply to the lamp during maintenance!**

● The light source is not bright
- Check that a suitable light source is installed for the luminaire.
- Check whether the power supply connection of the lamp or the control switch is in poor contact.
- Check whether the light source has reached the end of its service life or is damaged, and replace it with a high-quality light source of the same specification.
- Measure whether the power supply is insufficient.
- Check whether the light source has not cooled down completely due to abnormal operation. Let the lamp cool down for more than 15 minutes to allow the light source to cool down. After returning to the normal start-up range, turn the power on again and it can be used normally.
- Check whether the DMX512 controller sends a command to turn on the light source.
- Check whether the light source and trigger circuit are disconnected or defective.
- Check whether the wiring terminals on the internal trigger are in poor contact and tighten the plug.
- Check the "Fan Speed and Voltage" in the "Basic Information" menu to see if the speed of FAN1/FAN2/FAN3 is above 500RPN. If it is below 500RPM, the light source will not light up. Replace the fan with the same specification.
- Check whether the over-temperature protection temperature switch inside the lamp is damaged. Go to the menu "Basic Information" and select "Equipment Temperature" to check - whether the temperature measuring plate shows that the temperature is too high or there is no temperature display.

● The beam appears dim and uneven
- The light source may have reached the end of its service life and does not emit enough light. Replace it with a light source of the same specification.
- Check whether there is dust accumulated in the optical part and clean it.
- Measure whether the power supply is insufficient.
- Finely adjust the screw device used to change the height of the lamp until the ideal light is achieved. Enter the menu "Service Options" and select "Calibration" to enter color and pattern adjustment, which can be adjusted to the center.

● The projected image is blurry
- Check whether the DMX512 controller channel value corresponding to the electronic focus system is suitable for the current projection distance.
- Check whether the mechanical part of the focusing system is stuck, remove the dust and add antifreeze and temperature-resistant lubricating oil.

● The light source of the lamp works intermittently
- Check whether the fan is running normally or is blocked by dust and paper debris.
- Check whether the inlet and outlet cooling air vents are blocked by dust.
- Check whether the lamp has reached the end of its service life.

- Check whether the power supply is insufficient, and whether the power switch and wiring are in poor contact or aging.
- Check whether the over-temperature protection temperature switch inside the lamp is damaged.

● Although it emits light, the lamp does not accept instructions from the controller

- Check whether the digital start address value and function options of the lamp are correct.
- Check whether the connection of the communication control line is correct. The communication line is too long or has been interrupted.
- Check whether the control equipment fails and whether the signal amplifier connected in series fails.
- Check whether the communication line is too long or if other devices interfere with each other.
- Optimize wiring, shorten the length of control signal lines, and route high-voltage and low-voltage lines separately
- Add signal amplifier isolator.
- The signal line is made of high-quality shielded twisted pair (impedance characteristic is 75Ω), and the signal terminal resistor is connected at the end of the lamp.
- Check that the circuit board communication IC or CPU is burned out because the bulb performs an abnormal operation when it is not completely cooled, causing the instantaneous ultra-high voltage leakage generated by the trigger, and replace the PCB board.

● The lamp cannot be started

- Check whether the power supply parameters match the lamps.
- Check whether the fuse at the light fixture's power input is blown.
- Check that the lamp has poor contact or falls off due to extrusion deformation, vibration of internal parts, moisture, etc. during long-distance transportation.
- Check whether the internal wires and connectors of the lamp are desoldered or loose.
- Check whether the electrical components of the lamp (such as power switch, transformer, ballast, capacitor, varistor, filter, power supply PCB board, motor control PCB board, etc.) are loose, short-circuited, burned out, etc.

● Some functions of the lamp cannot accept controller instructions

- Check whether the control device sends correct action instructions for these functions.
- Check whether the mechanical parts corresponding to these functions are loose or deformed.
- Check whether the motor sockets corresponding to these functions are loose or the corresponding driver chips are burned out.
- Check whether the motor wires corresponding to these functions are broken at the corners.
- Check whether the motors corresponding to these functions are damaged.

## 8.Fixture Cleaning

It is absolutely essential that the fixture is kept clean to ensure the maximum light-output and allow the fixture to function reliably throughout its life. The fixture must be cleaned regularly to avoid dust, dirt and smoke-fluid residues building up on or within the fixture. The cleaning frequency depends on the application environment. Clean the fixture immediately if the dust enters it to avoid damage to the optical lens due to excessive dust.

- A soft lint-free cloth moistened with any good glass cleaning fluid is recommended, under no circumstances should solvents be used.
- Always dry the parts carefully.
- Clean the external optical lens at least every 20 days .



**CAUTION ! ! !**

**Disconnect from mains before starting maintenance operation.**

## 9.Duty exonerative and copyright protectio

- Light source belongs to consumption products, not within the scope of warranty.
- The manufacturer shall not bear any responsibility for any damage caused by failure to operate in accordance with this instruction.
- The manufacturer reserves the right of final interpretation for all information in this manual. For any questions, please refer to the official website.
- All the information in this manual shall not be copied without permission.
- The data contained in this statement are subject to change in the future without prior notice.